MICRO SWITCH
A DIVISION OF HONEYWELL
FEDED. MFR. CODE 91929

SWITCH-ENCLOSED

CATALOG LISTING
OPD-AR

THIS DRAWING COVERS A PROPRIETARY ITEM AND IS THE PROPERTY OF MICRO SWITCH, A DIVISION OF HONEYWELL. THIS DRAWING IS NOT TO BE COPIED OR USED WITHOUT THE APPROVAL OF MICRO SWITCH.

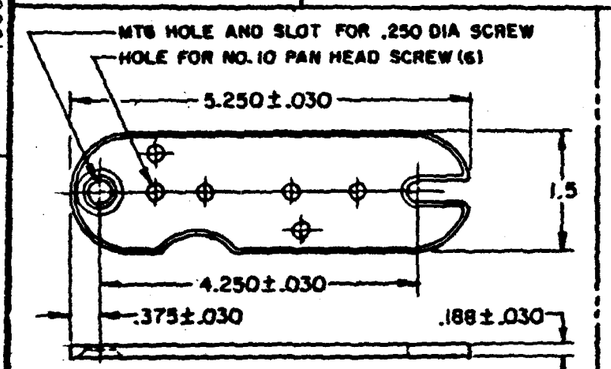

MOUNTING BRACKET (1) AND 10-32 UNF X .250 REF PAN HEAD SCREW (2) FURNISHED UNASSEMBLED
SCALE - HALF SIZE

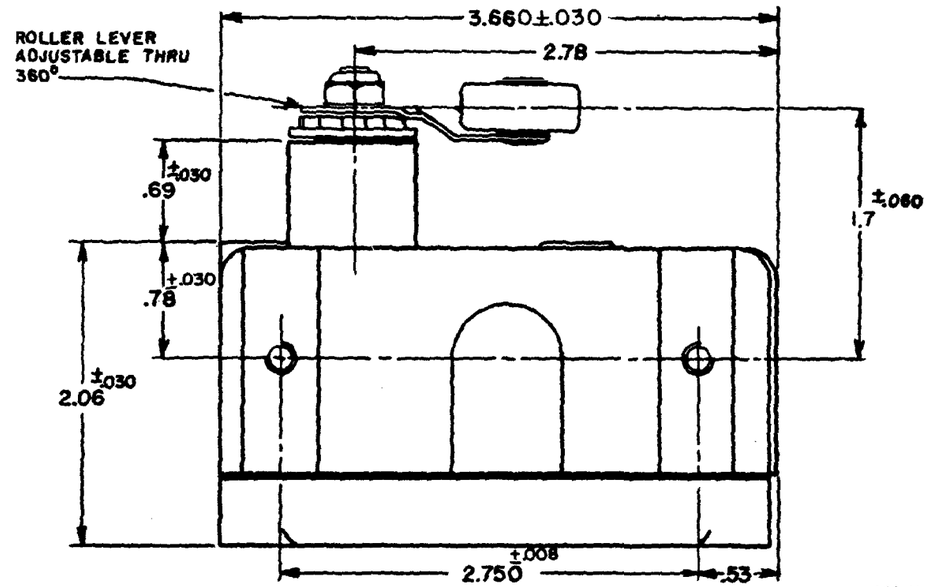

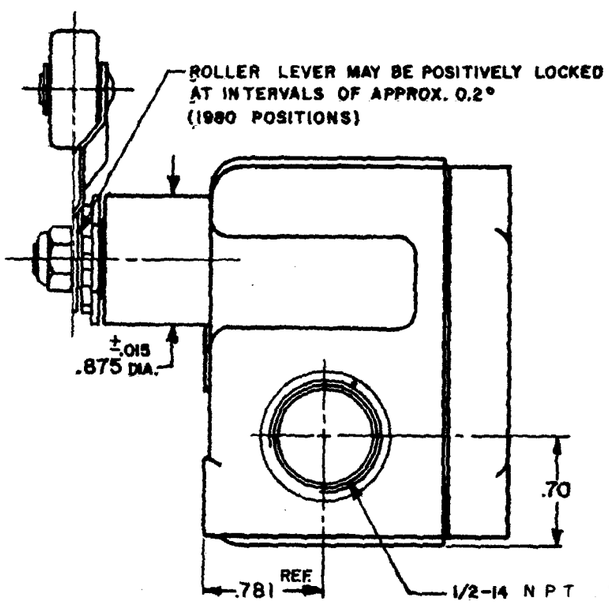

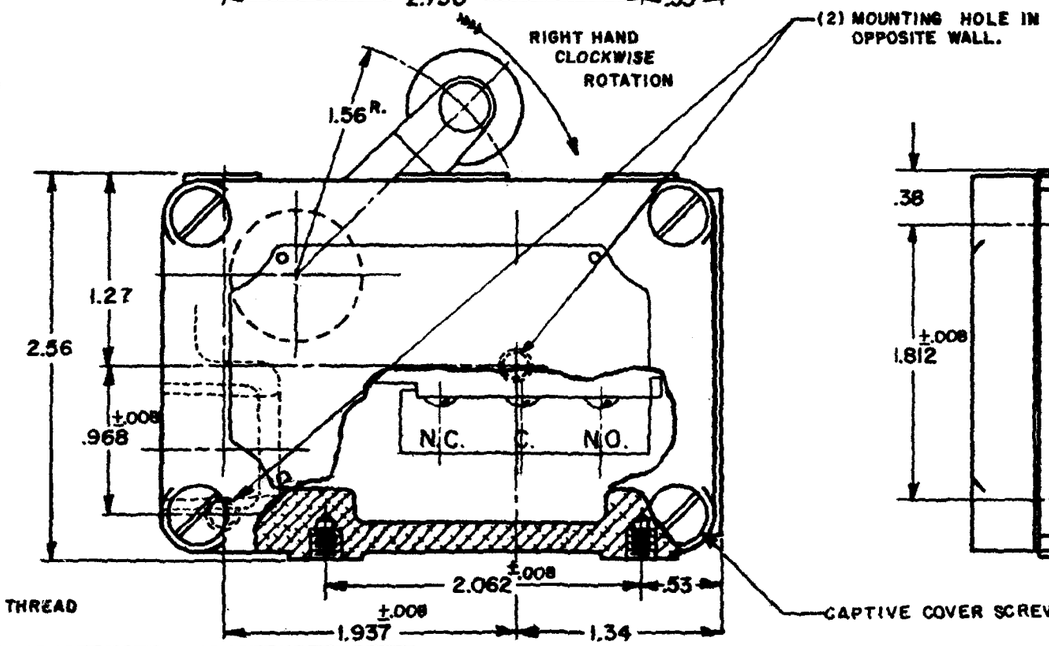

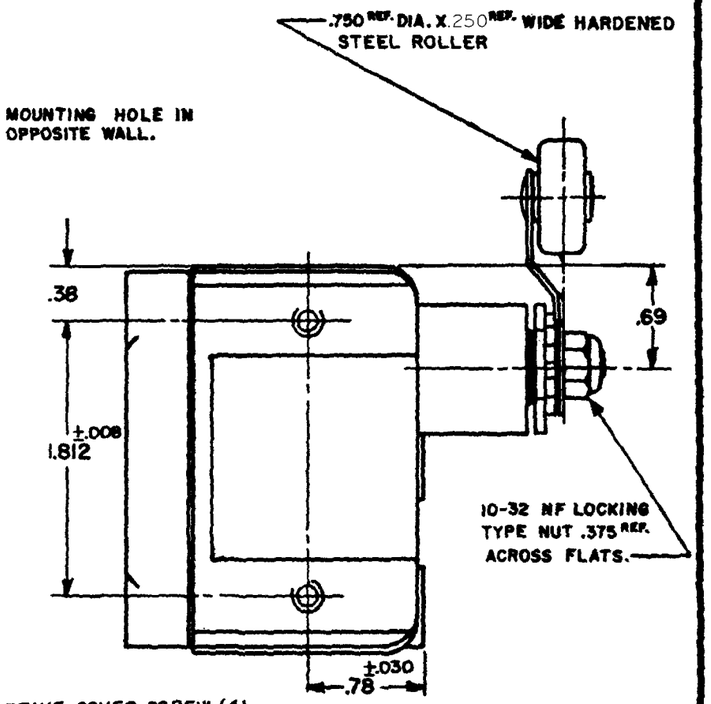

CHARACTERISTICS	
OPERATING FORCE	8-24 OZ.
RELEASE FORCE	4-12 OZ.
PRETRAVEL	.250 MAX.
DIFFERENTIAL TRAVEL	.109 MAX.
DO NOT OVERTRAVEL MORE THAN 25°	

BASIC SWITCH REPLACEMENT DT-2R4-A7

ELECTRICAL DATA	
CONTACT ARRANGEMENT	D.P.D.T.
-L59-	10 A-125 OR 250 VAC; 0.3 A-125 VDC; 0.15 A-250 VDC

SCALE FULL
DO NOT SCALE PRINT
UNLESS OTHERWISE SPECIFIED DIMENSIONS ARE IN INCHES
TOLERANCES ARE:
ONE PLACE (.0) ±.030
TWO PLACE (.00) ±.015
THREE PLACE (.000) ±.005
ANGLES ±
WEIGHT

NOTE-

1 - (8) MOUNTING SCREW HOLES, 10-32 NF-2B THREADS X .219 REF. DEEP.
2 - 4-40 NC X .125 REF. ROUND HEAD TERMINAL SCREWS AND LOCKWASHERS.
3 - SEALED CONSTRUCTION PROVIDES SPLASH RESISTANCE.

M | CO 81637 | GLH 3 APR 98

(M) OPD-AR ISSUE 4 | REPLACES | RELEASE NO. | DRAWING NUMBER | ISSUE | CHECK

OPD-AR

M

7 SEPT. 55 | C.N.T. | 7 SEPT. 55 | A.C.G. | 12 SEPT. 55 | G.C.H. | 18 AUG. 55 | C.M.A.

REVISIONS

A	C.O. 9182	C.M.A. 18 AUG. 55
B	CORR.	O.N.W. 22 OCT. 56
C	C.O. 11034	K.A.F. 13 DEC. 56
D	C013360	M.B.F. 16 JAN 59
E	C013827	L.S.O. 17 JULY 59
F	C018279	M B F 22 JUNE 64
G	C019878	M B F 13 OCT 68
H	C028803	D L F 21 JUL 69
J	C055987	JAS 5 NOV 84
K	C055031	G J W 26 MAR 85
L	C073344	G J W 10 OCT 92

DRAWN | CHECK