THIS DRAWING IS UNPUBLISHED.
VERTRAULICHE UNVEROEFFENTLICHTE ZEICHNUNG

RELEASED FOR PUBLICATION
FREI FUER VEROEFFENTLICHUNG

© COPYRIGHT – By –

ALL RIGHTS RESERVED.
ALLE RECHTE VORBEHALTEN

LOC	DIST
AI	—

PROJECT NO. : E93-52531

REVISIONS
AENDERUNGEN

P	LTR	DESCRIPTION BESCHREIBUNG	DATE	DWN	APVD
	B6	PART NUMBER STATUS UPDATED	24FEB2014	KJK	JK

	ORDER NO. BESTELL-NR.	CROSS-SECTION QUERSCHNITT mm²	CROSS-SECTION QUERSCHNITT AWG 1	STRIP LENGTH ABISOLIER-LANGE /mm 2	TYPE AUSFüHRUNG	COLOUR FARBE 4	L_1 /mm	L_2 /mm	D_1 /mm	S_1 /mm	S_2 /mm	D_2 /mm	D_3 /mm	COLOUR TYPE FARB-REIHE 4	PACKING UNIT VERPACKUNGS-EINHEIT 3 PIECES PER BAG STüCK PRO BEUTEL
	966 144-1	2x0.50	2x20	11	NORMAL NORMAL	WHITE WEISS	15.0 ±1.5	8.00 ±0.6	$1.40^{+0.14}$	0.15 ±0.05	0.25 ±0.10	2.50 ±0.2	4.70 ±0.4	1/DIN	500
	966 144-2	2x0.75	2x18	11	NORMAL NORMAL	GREY GRAU	15.0 ±1.5	8.00 ±0.6	$1.70^{+0.25}$	0.15 ±0.05	0.25 ±0.10	2.80 ±0.2	5.00 ±0.4	DIN	500
	966 144-3	2x0.75	2x18	13	LONG LANG	GREY GRAU	17.0 ±1.5	10.0 ±0.6	$1.70^{+0.25}$	0.15 ±0.05	0.25 ±0.10	2.80 ±0.2	5.00 ±0.4	DIN	500
	966 144-4	2x1.00	2x17	11	NORMAL NORMAL	RED ROT	15.0 ±1.5	8.00 ±0.6	$1.95^{+0.25}$	0.15 ±0.05	0.30 ±0.10	3.40 ±0.2	5.40 ±0.4	1/DIN	500
	966 144-5	2x1.00	2x17	13	LONG LANG	RED ROT	17.0 ±1.5	10.0 ±0.6	$1.95^{+0.25}$	0.15 ±0.05	0.30 ±0.10	3.40 ±0.2	5.40 ±0.4	1/DIN	500
	966 144-6	2x1.50	2x16	12	NORMAL NORMAL	BLACK SCHWARZ	16.0 ±1.5	8.00 ±0.6	$2.20^{+0.25}$	0.15 ±0.05	0.30 ±0.10	3.60 ±0.2	6.60 ±0.4	1/DIN	500
	966 144-7	2x1.50	2x16	16	LONG LANG	BLACK SCHWARZ	20.0 ±1.5	12.0 ±0.6	$2.20^{+0.25}$	0.15 ±0.05	0.30 ±0.10	3.60 ±0.2	6.60 ±0.4	1/DIN	500
	966 144-8	2x2.50	2x14	14	NORMAL NORMAL	BLUE BLAU	18.5 ±1.5	10.0 ±0.6	$2.80^{+0.25}$	0.20 ±0.05	0.30 ±0.10	4.20 ±0.2	7.80 ±0.4	2/DIN	250
	966 144-9	2x2.50	2x14	17	LONG LANG	BLUE BLAU	21.5 ±2.0	13.0 ±0.6	$2.80^{+0.25}$	0.20 ±0.05	0.30 ±0.10	4.20 ±0.2	7.80 ±0.4	2/DIN	250
	1-966 144-0	2x4.00	2x11	17	NORMAL NORMAL	GREY GRAU	23.0 ±2.0	12.0 ±0.6	$3.70^{+0.30}$	0.20 ±0.05	0.40 ±0.15	4.90 ±0.4	8.80 ±0.4	2/DIN	100
OBSOLETE	~~1-966 144-1~~	2x6.00	2x10	19	NORMAL NORMAL	YELLOW GELB	26.0 ±2.0	14.0 ±0.6	$4.80^{+0.30}$	0.20 ±0.05	0.40 ±0.15	6.90 ±0.4	10.0 ±0.4	DIN	100
OBSOLETE	~~1-966 144-2~~	2x10.0	2x7	20	NORMAL NORMAL	RED ROT	26.0 ±2.0	14.0 ±0.6	$6.40^{+0.40}$	0.20 ±0.05	0.40 ±0.15	7.20 ±0.4	13.0 ±0.5	DIN	100
OBSOLETE	~~1-966 144-3~~	2x16.0	2x5	21	NORMAL NORMAL	BLUE BLAU	30.0 ±2.0	14.0 ±0.6	$8.20^{+0.40}$	0.20 ±0.05	0.40 ±0.15	9.60 ±0.4	18.4 ±1.0	DIN	50
OBSOLETE	~~1-966 144-4~~	2x0.5	2x20	11	NORMAL NORMAL	ORANGE ORANGE	15.0 ±1.5	8.00 ±0.6	$1.40^{+0.14}$	0.15 ±0.05	0.25 ±0.10	2.50 ±0.2	4.70 ±0.4	2	500
OBSOLETE	~~1-966 144-5~~	2x0.75	2x18	11	NORMAL NORMAL	BLUE BLAU	15.0 ±1.5	8.00 ±0.6	$1.70^{+0.25}$	0.15 ±0.05	0.25 ±0.10	2.80 ±0.2	5.00 ±0.4	1	500
OBSOLETE	~~1-966 144-6~~	2x0.75	2x18	11	NORMAL NORMAL	WHITE WEISS	15.0 ±1.5	8.00 ±0.6	$1.70^{+0.25}$	0.15 ±0.05	0.25 ±0.10	2.80 ±0.2	5.00 ±0.4	2	500
	1-966 144-7	2x0.75	2x18	13	LONG LANG	BLUE BLAU	17.0 ±1.5	10.0 ±0.6	$1.70^{+0.25}$	0.15 ±0.05	0.25 ±0.10	2.80 ±0.2	5.00 ±0.4	1	500
OBSOLETE	~~1-966 144-8~~	2x0.75	2x18	13	LONG LANG	WHITE WEISS	17.0 ±1.5	10.0 ±0.6	$1.70^{+0.25}$	0.15 ±0.05	0.25 ±0.10	2.80 ±0.2	5.00 ±0.4	2	500
OBSOLETE	~~1-966 144-9~~	2x1.00	2x17	11	NORMAL NORMAL	YELLOW GELB	15.0 ±1.5	8.00 ±0.6	$1.95^{+0.25}$	0.15 ±0.05	0.30 ±0.10	3.40 ±0.2	5.40 ±0.4	2	500
OBSOLETE	~~2-966 144-0~~	2x1.00	2x17	13	LONG LANG	YELLOW GELB	17.0 ±1.5	10.0 ±0.6	$1.95^{+0.25}$	0.15 ±0.05	0.30 ±0.10	3.40 ±0.2	5.40 ±0.4	2	500
OBSOLETE	~~2-966 144-1~~	2x1.50	2x16	12	NORMAL NORMAL	RED ROT	16.0 ±1.5	8.00 ±0.6	$2.20^{+0.25}$	0.15 ±0.05	0.30 ±0.10	3.60 ±0.2	6.60 ±0.4	2	500
	2-966 144-2	2x1.50	2x16	16	LONG LANG	RED ROT	20.0 ±1.5	12.0 ±0.6	$2.20^{+0.25}$	0.15 ±0.05	0.30 ±0.10	3.60 ±0.2	6.60 ±0.4	2	500
OBSOLETE	~~2-966 144-3~~	2x2.50	2x14	14	NORMAL NORMAL	GREY GRAU	18.5 ±1.5	10.0 ±0.6	$2.80^{+0.25}$	0.20 ±0.05	0.30 ±0.10	4.20 ±0.2	7.80 ±0.4	1	250
OBSOLETE	~~2-966 144-4~~	2x2.50	2x14	17	LONG LANG	GREY GRAU	21.5 ±2.0	13.0 ±0.6	$2.80^{+0.25}$	0.20 ±0.05	0.30 ±0.10	4.20 ±0.2	7.80 ±0.4	1	250
	2-966 144-5	2x4.00	2x11	17	NORMAL NORMAL	ORANGE ORANGE	23.0 ±2.0	12.0 ±0.6	$3.70^{+0.30}$	0.20 ±0.05	0.40 ±0.15	4.90 ±0.4	8.80 ±0.4	1	100
	2-966 144-6	2x6.00	2x10	19	NORMAL NORMAL	GREEN GRüN	26.0 ±2.0	14.0 ±0.6	$4.80^{+0.30}$	0.20 ±0.05	0.40 ±0.15	6.90 ±0.4	10.0 ±0.4	1	100
OBSOLETE	~~2-966 144-7~~	2x6.00	2x10	19	NORMAL NORMAL	BLACK SCHWARZ	26.0 ±2.0	14.0 ±0.6	$4.80^{+0.30}$	0.20 ±0.05	0.40 ±0.15	6.90 ±0.4	10.0 ±0.4	2	100
OBSOLETE	~~2-966 144-8~~	2x10.0	2x7	20	NORMAL NORMAL	BROWN BRAUN	26.0 ±2.0	14.0 ±0.6	$6.40^{+0.40}$	0.20 ±0.05	0.40 ±0.15	7.20 ±0.4	13.0 ±0.5	1	100
OBSOLETE	~~2-966 144-9~~	2x10.0	2x7	20	NORMAL NORMAL	IVORY ELFENBEIN	26.0 ±2.0	14.0 ±0.6	$6.40^{+0.40}$	0.20 ±0.05	0.40 ±0.15	7.20 ±0.4	13.0 ±0.5	2	100
OBSOLETE	~~3-966 144-0~~	2x16.0	2x5	21	NORMAL NORMAL	IVORY ELFENBEIN	30.0 ±2.0	14.0 ±0.6	$8.20^{+0.40}$	0.20 ±0.05	0.40 ±0.15	9.60 ±0.4	18.4 ±1.0	1	50
OBSOLETE	~~3-966 144-1~~	2x16.0	2x5	21	NORMAL NORMAL	GREEN GRüN	30.0 ±2.0	14.0 ±0.6	$8.20^{+0.40}$	0.20 ±0.05	0.40 ±0.15	9.60 ±0.4	18.4 ±1.0	2	50

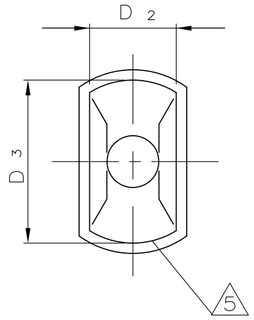

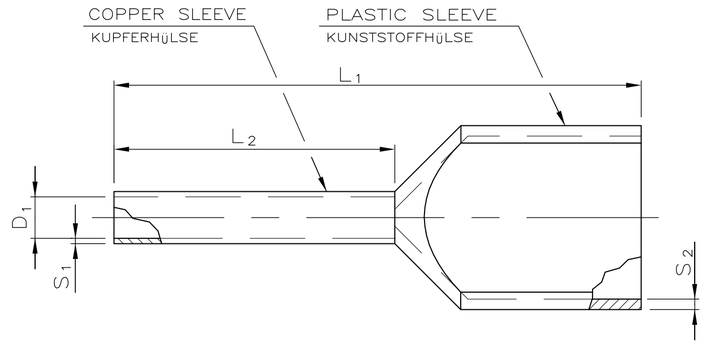

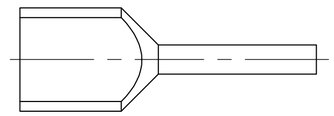

NORMAL
NORMAL

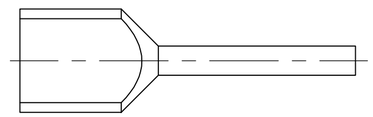

LONG
LANG

1. THE AWG CROSS-SECTION CAN DIFFER SLIGHTLY TO THE DIN-STANDARD CROSS-SECTION VALUES.
2. RECOMMENDED STRIP LENGTH
3. TUBULAR END-SLEEVES PACKED INTO PLASTIC BAG
4. COLOUR TYPE 1: COLOURS PER TELEMECANIQUE STANDARD
   COLOUR TYPE 2: COLOURS PER WEIDMüLLER STANDARD
   COLOUR TYPE DIN: COLOURS PER DIN 46228 PART 4
5. MAX.INSULATION DIA. OF WIRE: $0.5 \times D_{3\,MIN.} - 0.1$

6. USE HAND TOOL 539660-1

1. DER AWG-QUERSCHNITT KANN VON DEN DIN-NORM QUERSCHNITTSWERTEN GERINGFüGIG ABWEICHEN.
2. EMPFOHLENE ABISOLIERLäNGE
3. ADERENDHüLSEN IN PLASTIKBEUTEL VERPACKT
4. FARBREIHE 1: FARBEN NACH TELEMECANIQUE STANDARD
   FARBREIHE 2: FARBEN NACH WEIDMüLLER STANDARD
   FARBREIHE DIN: FABEN NACH DIN 46228 TEIL 4
5. MAX.ISOLATIONS-Ø DER LEITUNG: $0.5 \times D_{3\,MIN.} - 0.1$

6. BENUTZEN SIE HANDWERKZEUG 539660-1

966144

THIS DRAWING IS A CONTROLLED DOCUMENT.
DIESE ZEICHNUNG IST EIN KONTROLLIERTES DOKUMENT.

DIMENSIONS: MASSE\NHEITEN: mm

TOLERANCES UNLESS OTHERWISE SPECIFIED: ALLGEMEINTOLERANZEN
0 PLC ± –
1 PLC ± –
2 PLC ± –
3 PLC ± –
4 PLC ± –
ANGLES / WINKEL ± –

MATERIAL: PP/E-Cu

FINISH / OBERFLAECHE / FARBE: FINISH/OBERFL.: Sn
COLOUR: SEE TABLE
FARBE: SIEHE TABELLE

DWN R.SCHMIDT 22-FEB-93
CHK W.BÖCK 02-MAR-93
APVD G.FELDMEIER 29-NOV-00
PRODUCT SPEC PRODUKTSPEZ. —
APPLICATION SPEC. VERABEITUNGSSPEZ. —
WEIGHT GEWICHT —

TE Connectivity

NAME: DOUBLE CONDUCTOR TUBULAR END-SLEEVE WITH PLASTIC SLEEVE

SIZE	CAGE CODE	DRAWING NO ZEICHNUNGS-NR.	RESTRICTED TO NUR FUER
A2	00779	C-966144	—

CUSTOMER DRAWING / KUNDENZEICHNUNG

SCALE MASSSTAB 1:1 | SHEET BLATT 1 OF VON 1 | REV B6

1471-9 (3/11)