受控 CONTROLLED DOCUMENT					
编号 P/N	25-7034-CUST	版本 Rev	01	日期 Rel'd Date	Apr29,09

DRAWING NO.
25-7034-CUST

REVISIONS

01	OFFICIAL RELEASE				
	03-10-09	YU	YU	TH	Thomas Chow

Description:	F-56 ALS RG-6 Quad Shield
Part No:	25-7034
Application:	For RG-6 Quad Shield Cable
Crimp Tool:	24-7710 or 24-8866P
Impedance:	75 Ohms
Frequency Range:	0-750 MHz
Material:	Body Brass Nickel plated
	Nut Zinc Nickel plated
RoHS Compliance:	Yes
Technical Detail:	Refer to Emerson Document P/N 25-0000

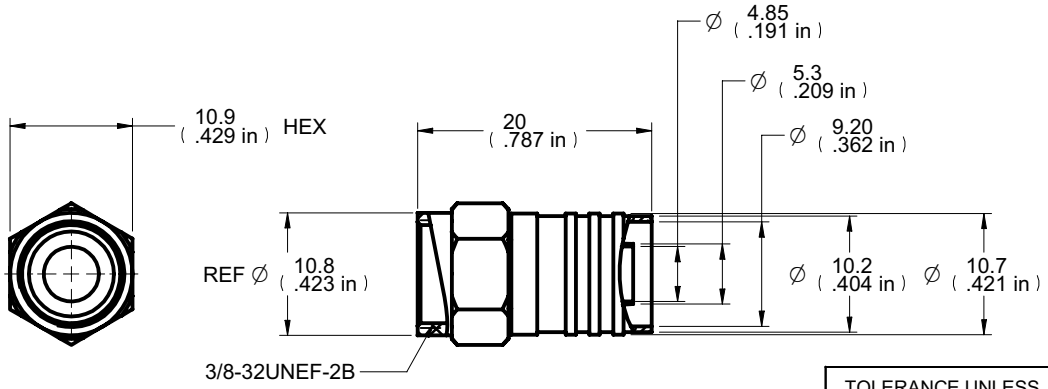

DIM OUTLINE

CUSTOMER COPY

TOLERANCE UNLESS OTHERWISE SPECIFIED		DRAWN BY BETTY.YU	DATE 03-10-09
DECIMALS	mm	CHECKED BY BETTY.YU	DATE 03-10-09
X	± 0.5		
X.X	± 0.3	APPROVED BY THOMAS	DATE 03-10-09
X.XX	± 0.1		
ANGLES	± 0.5°	U/M mm	

THIS DRAWING WAS PRODUCED BY COMPUTER, DO NOT SCALE DRAWING OR UPDATE MANUALLY.

EMERSON. Network Power — Connectivity Solutions

TITLE: F-56 ALS RG-6 QUAD SHIELD

SHEET	DRAWING NO.	SIZE
1 OF 1	25-7034-CUST	A